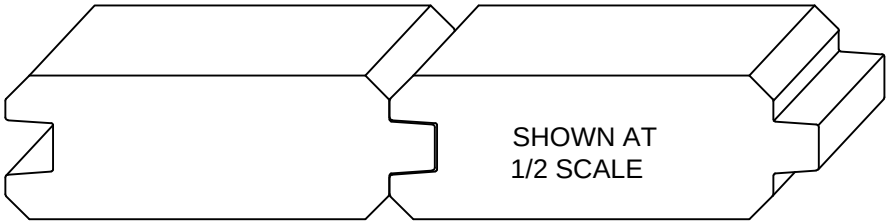

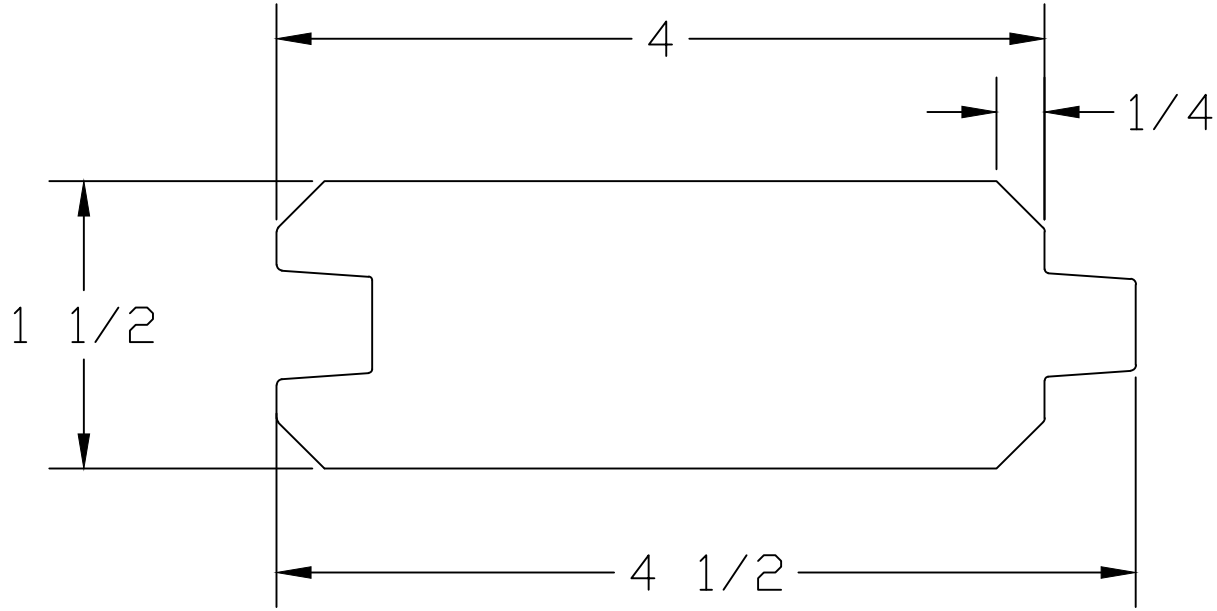

VALLEY HARDWOODS

NO.

V3174